Advanced AC Circuit

Laboratory Exercise No: 1

Sinusoidal Steady-State AC Circuit Characteristics

Introduction

The main objective of this laboratory exercise is to build, test, characterize sinusoidal steady-state AC Circuits and design RC filters. In this lab, you will learn to study and observe the response of combined frequency AC circuit via the oscilloscope and to measure the phase difference between AC signals (with same frequency). You will also learn how to diagnose a fault in the circuit.

Most electronic devices and systems receive multiple frequency combined signals. The same circuit behaves differently to different frequencies. Phasor circuit analysis can be used for each frequency (other sources with different frequency should be set to zeros) and then superposition principle can be used in time domain.

1. Sinusoidal Steady-State AC Circuit

Build the circuit shown in Fig.1 with **Function Waveform Generator** as inputs and v_8 as output and use **Digital Oscilloscope** to observe and measure.

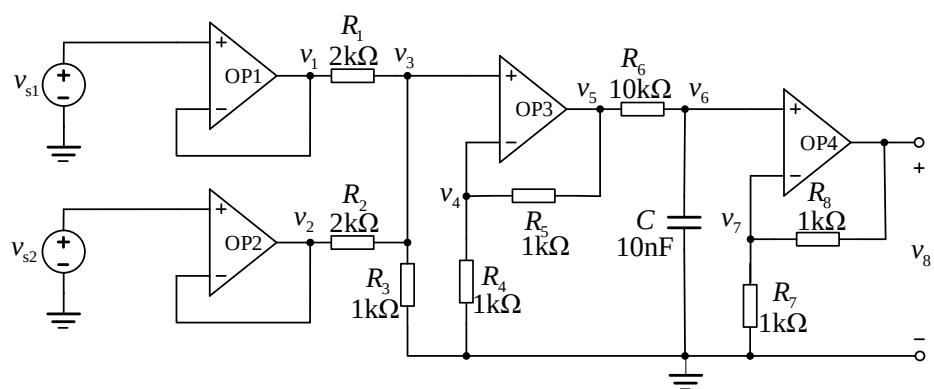

Figure 1: Sinusoidal Steady-State AC Circuit

2. Pre-Lab Work

a) **Theory analysis**

In Fig.1, set v_{s2} to zero and let v_{s1} work alone. Use phasor analysis method to find $v_5(\omega)$ and $v_8(\omega)$ shown in the circuit. They are functions varying with the frequency f of input signal v_{s1}. Determine the frequency f_{max} when v_{8pp} falls down with frequency to 70.7% (-3db) of v_{1pp}. Calculate the phase difference φ_1 between v_8 and v_1. Similarly, set v_{s1} to zero

and let v_{s2} work alone. Determine the frequency f_{min} when v_{8pp} falls down with frequency to 5% (-26db) of v_{2pp}. Calculate the phase difference φ_2 between v_8 and v_2.

b) **Learn to use op amp TL084**

Check the data sheet for op amp TL084 and learn how to use it.

c) **Simulation Practice**

Use Multisim 14.0 to simulate your circuit (record wave forms in each step).

1) Set $v_{s1pp} = 5V$, $v_{s2pp} = 0V$. Observe the wave forms of v_1 and v_8 and measure f_{max} and φ_1.
2) Set $v_{s2pp} = 5V$, $v_{s1pp} = 0V$. Observe the wave forms of v_2 and v_8 and measure f_{min} and φ_2.
3) Set $v_{s1pp} = 5V$, $f_1 = f_{max}$; $v_{s2pp} = 5V$, $f_2 = f_{min}$. Observe the wave forms of v_5 and v_8. Then measure the amplitude of f_{max} signal and f_{min} signal from v_8.

Note: when you measure the phase difference, try both the methods given in the following and compare the difference.

Methods of measuring the phase difference

a) **Double traces method**

Input the two sinusoidal signals into tunnel A and tunnel B on the oscilloscope respectively. Set the work mode in X (Time base, Y/T). Get two stable wave forms around one cycle(period). Move the two cursors on the positions where the two sinusoidal signals are in the same phase (amplitudes are both zeros or maximums). Measure the time difference T_2-T_1 and the phase difference will be

$$\varphi = -2\pi(T_2 - T_1)/T$$

where T is the period of the signal and $T=1/f$.

b) **Ellipse or Lissajous-Figure method**

Input the two sinusoidal signals into tunnel A and tunnel B on the oscilloscope respectively. Set the work mode in X-Y (A/B or B/A). You will see an ellipse on the screen. When $v_1(t) = \sin \omega t$ is fed into X-axis and $v_2(t) = \sin(\omega t + \varphi)$ into Y-axis, for example, you will see an ellipse on the screen similar to Fig. 2.

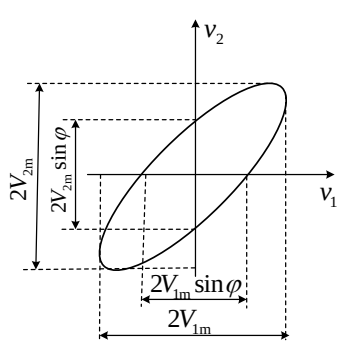

Figure 2 Lissajous-Figure

Measure the distance between the intersections on X-axis (getting $2V_{1m}\sin\varphi$) or Y-axis (getting $2V_{2m}\sin\varphi$) and then determine φ.

3. Lab Section 1

In this laboratory, you will learn how to build an AC circuit on a bread board, observe wave forms on the oscilloscope and measure the frequency, phase difference and amplitude. The procedure includes the following steps:

(i) Measure the resistance and capacitance rated R=1 kΩ, 2 kΩ, 10 kΩ, C=10 nF. Using these measured values to replace the values of R1-R8 and C in your simulation circuit, find f_{max}, f_{min}, φ_1, and φ_2 again. (you should use these results as reference when you analyze the errors for the following measurements.)

(ii) Find out the right connections for op amp TL084. Design the whole connection pattern on the bread board. Use the wires offered in the lab. Cut the wire in right lengths which can be beautifully arranged on the board. Connect the circuit correctly.

(iii) Select Sine Function from **Function Waveform Generator**, set the proper frequency and V_p.

(iv)Adjust **Digital Oscilloscope** to show stable wave forms at the node you want to observe.

(v) Measure f_{max} , φ_1, f_{min} and φ_2 and compare them with the simulation results in step(i).

(vi) Set $v_{s1pp} = 5\text{V}$, $f_1 = f_{max}$; $v_{s2pp} = 5\text{V}$, $f_2 = f_{min}$. Observe the wave forms of v_5 and v_8. What conclusion can you get?

4. Lab Section 2

In this laboratory, you will learn how to diagnose fault you may make. The procedure includes the following steps:

(i) Using 1kΩ to substitute R_6 for 10kΩ and repeat the step(vi) in Lab section1 and record the wave forms of v_5 and v_8. Explain the wave forms you get.

(ii) Exchange the position of R_6 (10kΩ) and the capacitor C and repeat the step(vi) in Lab section1. Record the wave forms of v_5 and v_8 and explain the wave forms you get.

5. Lab Section 3

(i) Referring to the circuit shown in Figure 1, design a circuit to extract the 1kHz signal from the combined sinusoidal signals of 1kHz and 20kHz and assess the result through the theoretical analysis, software simulation or practical work.

(ii) Referring to the circuit you used in Lab Section 2(ii), design a circuit to extract the 20kHz signal from the combined sinusoidal signals of 1kHz and 20kHz and assess the result through the theoretical analysis, software simulation or practical work.

(iii) Using the circuit you just designed in (ii), try to input 5V (Vpp) 1kHz square signal in v_{s1} and 0.5V (Vpp) 20kHzsinusoidal signal in v_{s2} and observe the wave forms from v_5 and v_8

6. Report Submission

The report should include:

a) detailed Pre-lab works, including the circuit analysis, the solution of the outputs and their wave forms, the simulation circuits and their export wave forms,

b) calculations in theory and measured data in a properly designed data table,

c) the wave forms of v_5 and v_8 exported from the **Digital Oscilloscope**,

d) answers to the questions raised in Lab section2,

e) the circuits you designed in Lab Section 3 and the corresponding results.

Make sure the names and IDs of **BOTH** team members are on the report.

6. Assessment of Lab1

i) This lab is assessed by 100marks.

ii) The prelab work is assessed individually by 30% which includes theory analysis (in paper) and simulation work (in paper or software).

iii) The lab work is designed to be completed in groups of two. The layout of the circuit is assessed by 10%. Each group is required to submit ONE report which is assessed by 60%. Personal prelab work should be attached to the report behind.